A SHARPENING SYSTEM FOR WOODTURNING TOOLS

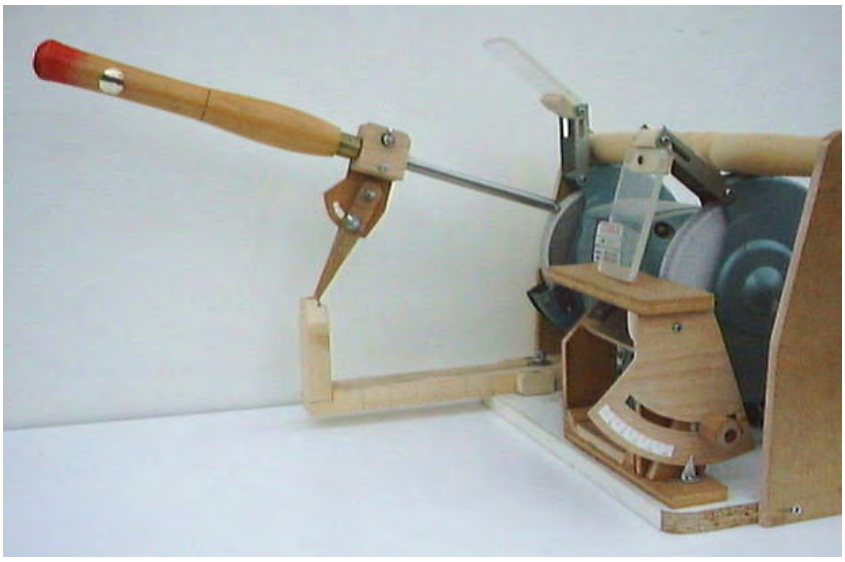

Contents

A. An adjustable jig for sharpening turning tools
1. General views
2. Sharpening jig: assembly diagram - sheet 1 of 2
3. Sharpening jig: assembly diagram - sheet 2 of 2
4. Sharpening jig parts - sheet 1 of 2
5. Sharpening jig parts - sheet 2 of 2
6. Step-by-step instructions for making the jig

B. A jig for creating a long grind on gouges

An adjustable jig for sharpening turning tools
Third angle projection
Scale: one half full size (approx.)
Copyright: Brian Clifford

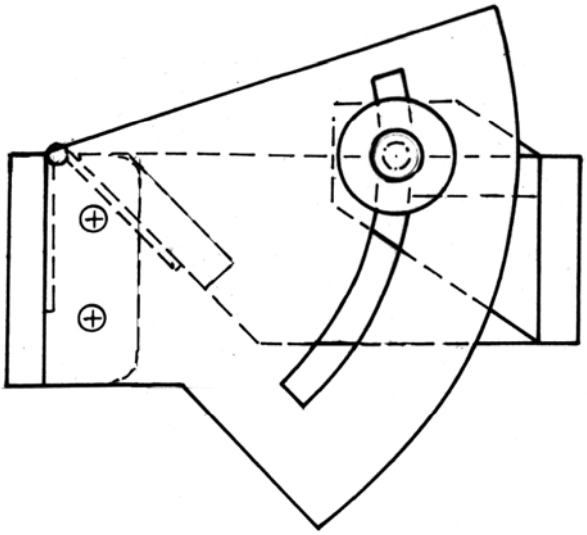

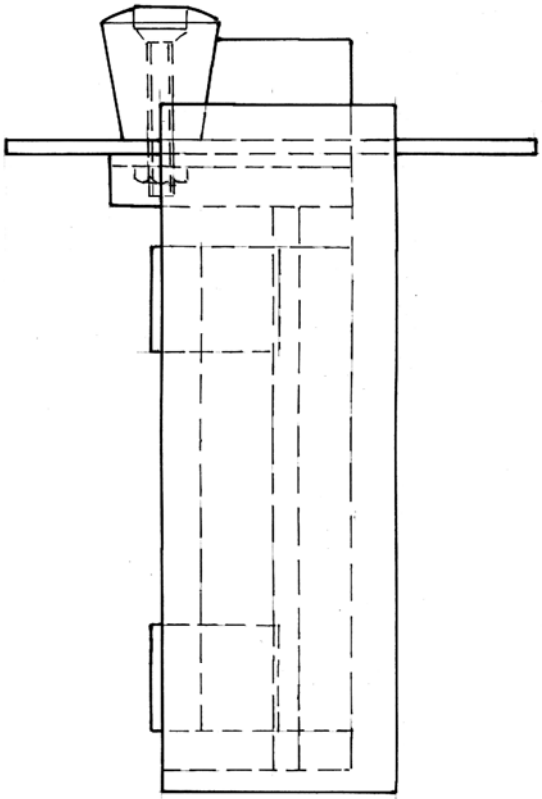

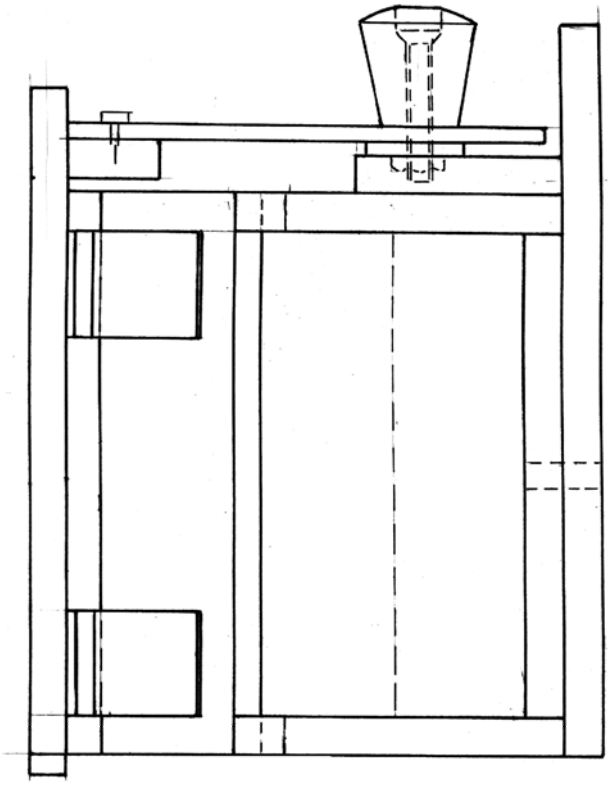

Sharpening jig: assembly diagram - sheet 1 of 2
Copyright: Brian Clifford

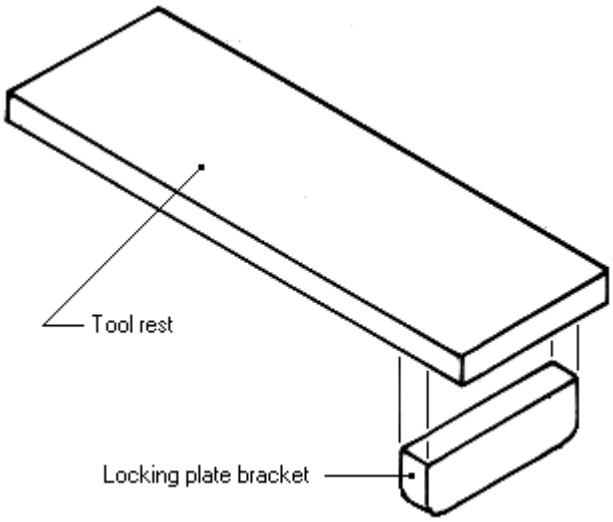

Tool rest assembly

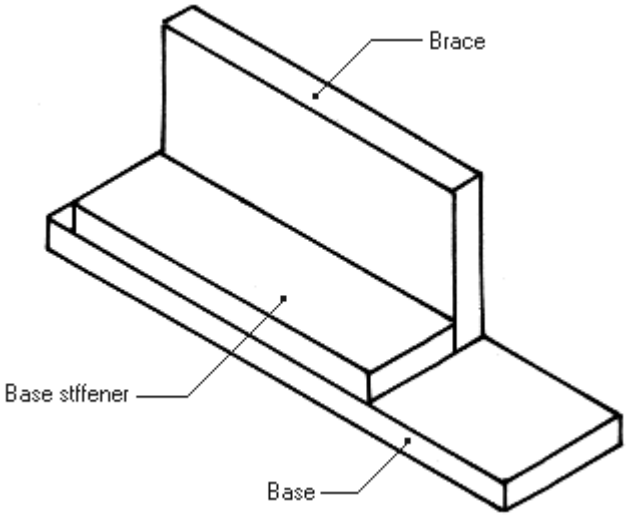

Base assembly

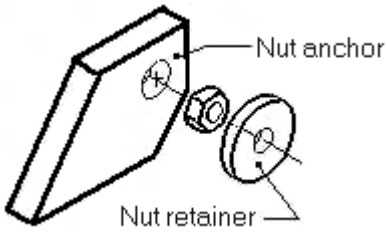

Nut anchor assembly

Sharpening jig: assembly diagram - sheet 2 of 2
Copyright: Brian Clifford

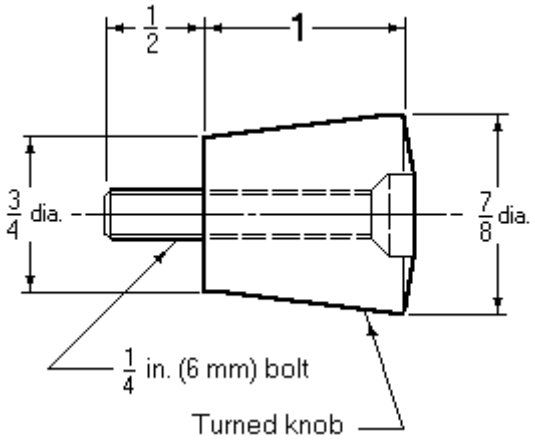

Knob assembly

(Dimensions in inches)

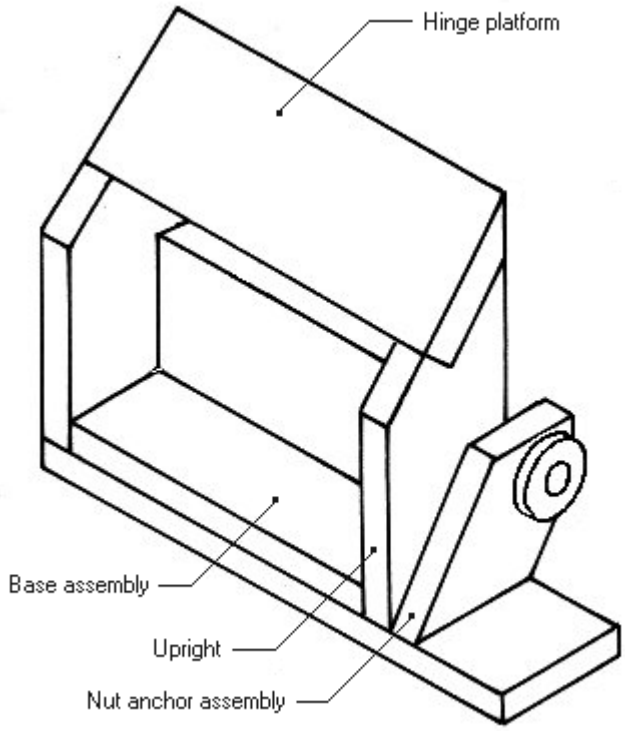

General assembly

Sharpening jig parts - sheet 1 of 2	
Scale: one half full size	Dimensions in inches
Copyright: Brian Clifford	

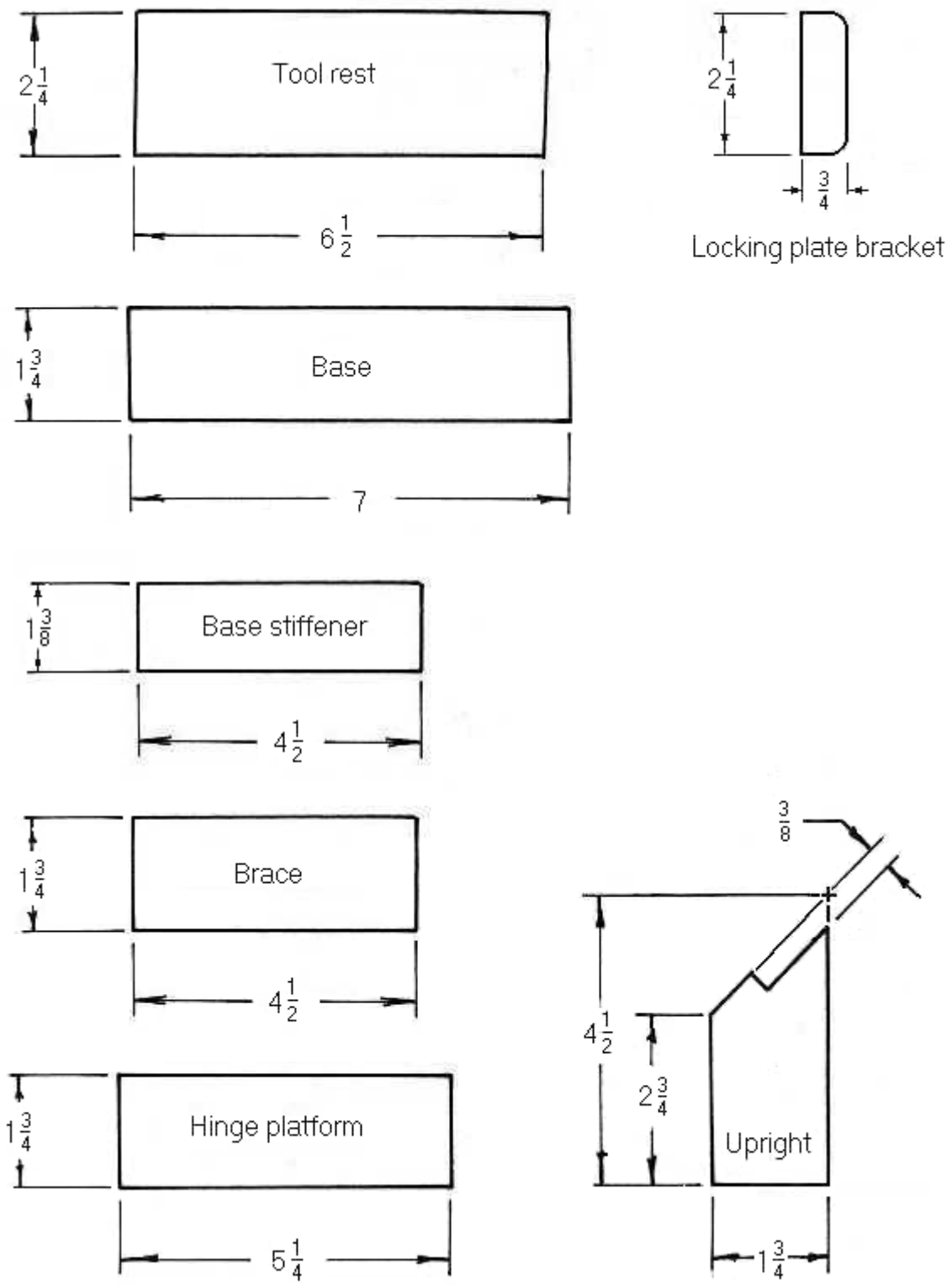

Material: plywood - 3/8 thick

Sharpening jig parts - sheet 2 of 2	
Not to scale	Dimensions in inches
Copyright: BrianClifford	

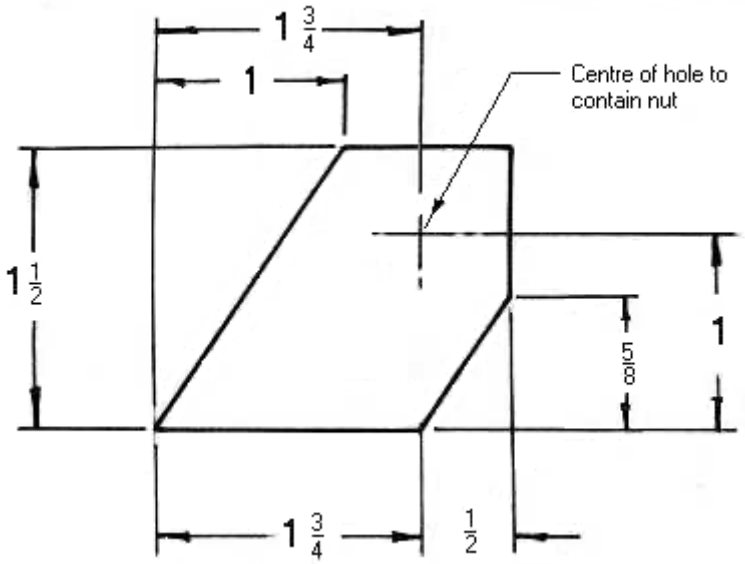

Nut anchor

Material: 3/8 ply

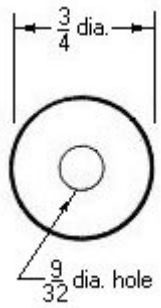

Nut retainer

Material: 1/8 ply

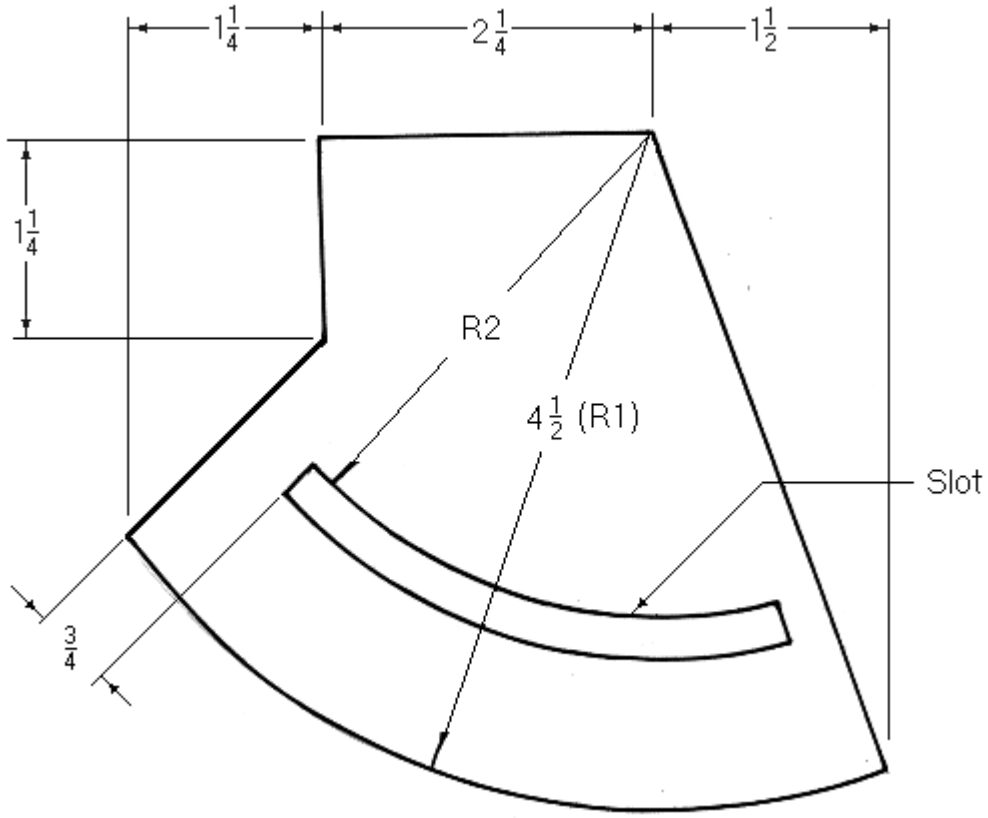

Locking plate

Material: 1/8 ply

Step-by-step instructions for making the sharpening jig

Introduction

To start with it is necessary to work out how high the uprights need to be. As shown in the plans I make the height 4½ inches but this may have to be changed to suit the grinder and the hinges that are to be used. The diagram below shows that, for a given angle of tool rest, the higher it is, the smaller the bevel angles that can be ground. If the leading edge of the tool is about ½ inch above the centre of the grinding wheels, that should be sufficient. Note that allowance has to be made for the thickness of the hinge. I used the type of hinge known as a back flap.

Raising the tool rest makes it easier to achieve small bevel angles

My dimensions can be taken as a guide. The centres of my grinding wheels are 5 inches above the baseboard. If the centres of the wheels on the grinder to be used are different to that then the height of the uprights will have to be changed accordingly.

Thought also has to be given to the dimensions of the locking plate. If the difference between the height of my grinder and that to be used is not very great then the dimensions I give for the locking plate will be satisfactory. Otherwise dimension R1 (4 3/8 in.) will have to be altered. The best way to make the change would be to lay out the locking plate to the dimensions given and then strike a new arc for R1. Note that the size of R2 is not given. The best way of marking the slot is described in step 15 below.

The general assembly

Step 1

Cut out all the parts.

Step 2

Glue the base stiffener to the base leaving 3/8 in. at the end for positioning the upright and 3/8 in. at the back for the brace. Allow the glue to dry. (Superglue is quick drying and strong.)

Step 3

Drill a hole (or cut a slot) in the base assembly so that the jig can be attached to the baseboard. A slot will allow for adjustment as the wheel wears down. Note that this apperture is not shown on the plans.

Step 4

Glue in the brace. Allow the glue to dry.

Step 5

Glue in the uprights. Allow the glue to dry.

Step 6

Glue in the hinge platform. Allow the glue to dry. Note that the top corner of the platform will protrude beyond the edges of the uprights. This can be removed by planing or sanding.

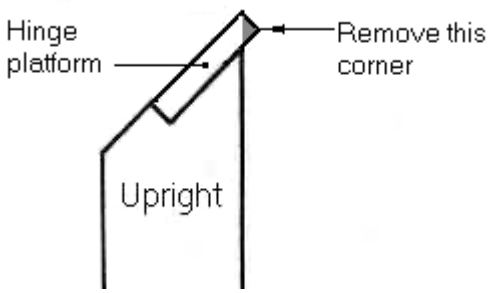

Remove the corner of the hinge platform after assembly

The nut anchor assembly

Step 7

Drill a recess in the face of the nut anchor. The diameter of this recess is equal to the width of the nut across the flats and the depth is the same as the thickness of the nut. A 9/32 in. diameter hole is then drilled through the centre of the recess.

Step 8

Force the locking knob into the recess in the nut anchor. This is best done in a vice – but it can be hammered into place.

Step 9

Glue the nut retainer over the nut.

Step 10

Glue the nut anchor to the side of the upright with its lower end on the base plate.

The locking plate and knob assembly

Step 11

Temporarily fit the tool rest to the hinge platform with the hinges.

Step 12

Mark the position of the locking plate bracket on the underside of the tool rest. To do this take a spacer equal to the width of the nut anchor assembly; hold this and the bracket against the upright; mark the position of the bracket.

Step 13

Remove the tool rest from the hinge platform and glue the bracket into the position marked.

Step 14

Reattach the tool rest

Step 15

Mark the position of the slot on the locking plate. To do this temporarily attach the locking plate to the locking plate bracket with two screws. Hold a pencil against the locking plate so that the point is opposite the centre of the nut in the nut anchor. Move the locking plate so that a line is drawn where the centre of the slot will be.

Step 16

Remove the locking plate. Mark out the slot from the centre line and cut the slot.

Step 17

Replace the locking plate.

Step 18

Make the knob assembly and screw into position.

Calibrating the jig

The sharpening jig will be much more useful if it is calibrated so that it can quickly and easily be set to the various bevel angles required. Indeed, the ease with which this jig can be set is one of its great virtues. It is calibrated by

adding a pointer to the base and a scale to the locking plate (see photograph on front page).

Step 19

Fix a small pointer to the base adjacent to the locking plate.

Step 20

Take a strip of card about one inch wide and six inches long.

Step 21

Cut one end of one strip to a bevel angle of 15° and the other to 55° (see Diagram 1 below)

Diagram 1

Step 22

Take the template and hold its bottom edge on the tool rest. Adjust the rest until the bevel at the upper end is resting on the grinding wheel in the appropriate position (see Diagram 2 below). Lock the jig with the knob and mark the locking plate at the position of the pointer. Turn the template round and repeat

Diagram 2

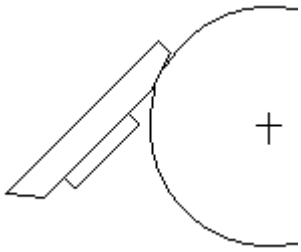

Step 23

Take a piece of thick white paper. Mark an arc on it with a radius equal to the distance from the centre of the hinges to the tip of the pointer. On this arc set out the distance between the two points you have marked on the locking plate.

Step 24

Divide the distance between the points into 8 equal segments. The easiest way to do this is to divide it in half, then divide each of the two divisions in half, and then divide each of the four spaces in half. This will provide a scale marked off into angles of 5°.

Step 25

Cut out this scale and glue it on the locking plate in the appropriate position. The end points of the scale must be aligned with the points originally marked on the plate.

Copyright: Brian Clifford

A jig for creating a long grind on gouges

The basic geometry of a jig to produce a long grind is shown in Diagram 1. The tool and the tool arm are locked together. The lower end of the tool arm rests in a 'V' shaped block at B and the tip of the tool rests on the wheel at A. To produce the grind the tool/tool arm assembly is rotated around the line AB. The lengths of the tool armand the base arm (in relation to the length of the tool) are fixed so as to provide the required bevel angle at the tip and the shape of the side of the long grind.

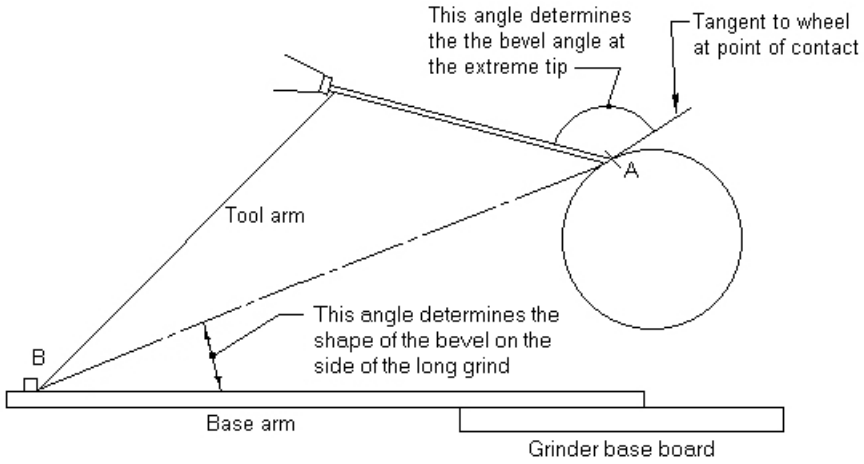

Diagram 1: The basic geometry of a jig to produce a long grind

The above arrangement requires an excessively long base arm. In order to make the system more compact, by shortening the base armand the tool arm, a post can be added. The height of this is arranged so that so that the upper end rests on the line AB. The length of the shorter base arm and the height of the post will depend to some extent on the height of the grinder's wheels above the baseboard. However, the angle between the tool arm and the tool, and the length of the base arm can be made so that they are adjustable. This makes the system very flexible and so that the dimensions for the tool and the base arms that I used on my system are likely to be satisfactory on many other machines. The details of these are given on the next sheet.

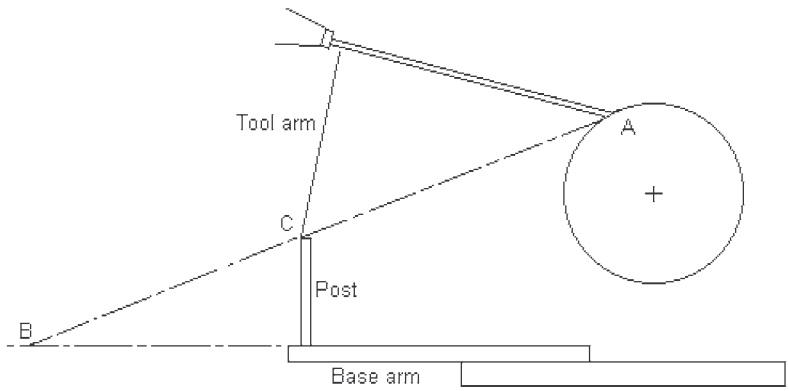

Diagram 2: The modification to the basic jig

A jig for creating a long grind on gouges

Sheet 2 of 3

For further information see notes on following sheet

Base arm and post assembly

Dimensions in inches

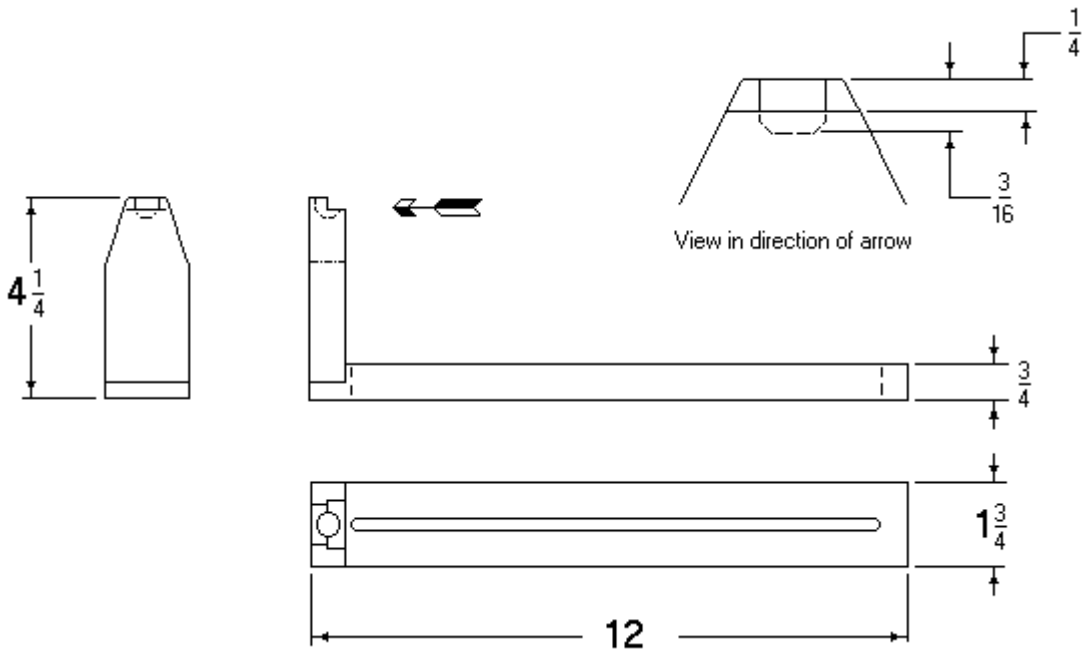

Tool arm assembly

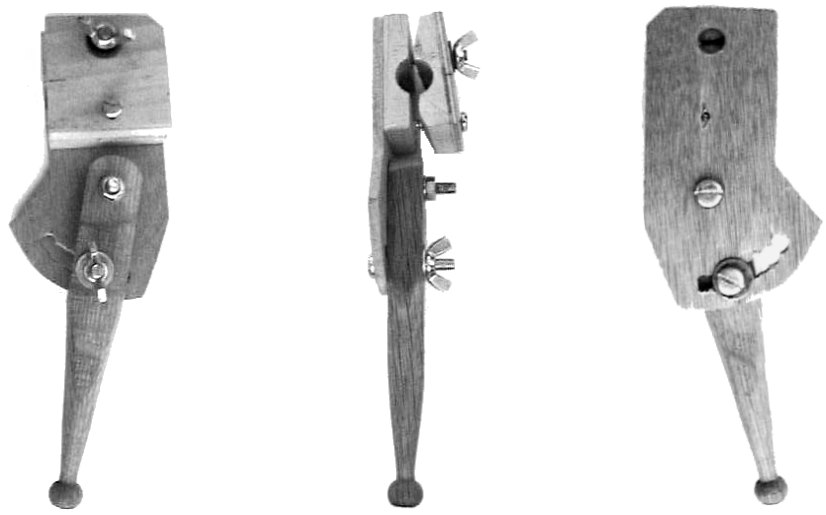

These photographs show the general arrrangement of the tool arm.
Critical dimensions are given in the notes overleaf

A jig for creating a long grind on gouges

Sheet 3 of 3

Notes

In order to facilitate the rotation of the tool/tool arm combination a partial ball and socket arrangement is employed. A 1/2 in. diameter hole is drilled in the top of the post to a depth of 7/16 in. As shown in the drawing some of the material is then cut away to allow movement of the arm. The bottom of the arm is turned down to form a 1/2 in. diameter ball which fits into that recess. The distance between the shaft of the tool and the centre of the ball is 6 inches.

The way in which I have made the arm adjustable can be seen from the photographs. In use the arm is pushed right up to the ferrule on the handle of the tool. In order to ensure that the grind is the same each time a pair of indexing marks can be made. One is scribed on the ferrule in an appropriate position, and the other on the arm next to it. When first setting up care has to be taken to ensure that the grind is the same on both sides of the tool.

The base arm is fixed to the base with a bolt which goes through the base and the slot in the arm. There is a wing nut on the top. The base arm is held in position with a strips of wood screwed to the base on either side.