SHOP-BUILT SHARPENING SYSTEM

A perfect edge on every tool, every time

KING HEIPLE

By King Heiple

Reprinted by permission

As "FINGERNAIL GRIND turning tools became more popular, I struggled to learn to create them freehand. And with persistence I gradually acquired reasonable proficiency, but I never could produce exactly the same angle each time and often had less than perfect results.

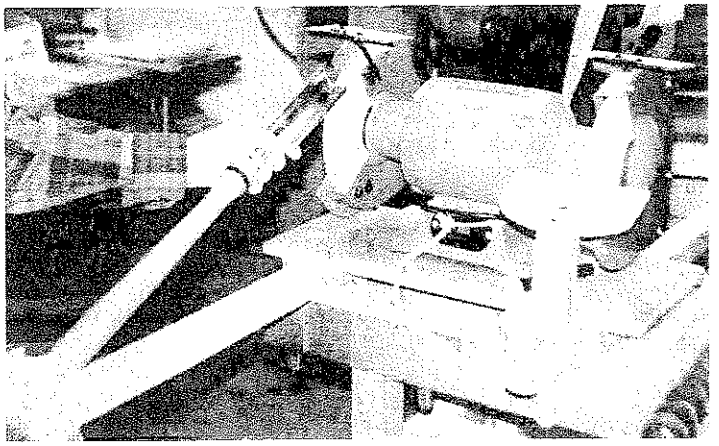

After buying two different commercial systems for fingernail grinds, I got much better results. But many of my fellow turners in the Northcoast Woodturners chapter in Cleveland were reluctant to make such an ill- vestment for something they doubted could make a difference in their work. When our club decided to purchase its own grinder to go with its three lathes, though, I suddenly decided that the club had to have a dedicated sharpening jig system to be really useful. In light of the club's budget, I decided to build one from scratch.

The result of my work is shown in this article. I used it at home for a month and now prefer the gouge holding jig over the commercial ones I also own!

If you have some leftover plywood and a few other pieces of scrap, you can make the entire system for less than $5.00!

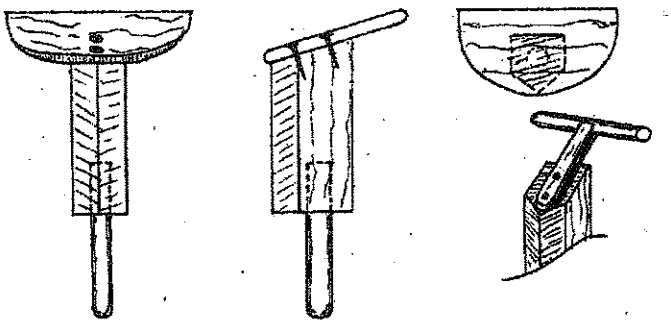

The base and slides

The only metal parts are two 5/6- in. T-nuts and matching thumb-screws, which are available from any local hardware, and enough drywall or other screws to assemble. Glue all the joints together during assembly as well; the unit has to withstand lots of vibration over time. Make the base first, as shown in the drawing on the third page of this article, then custom fit the slides to move easily. It's a good idea to make two slides at once, to avoid the hassle of I changing the slide between the two wheels. By having an economical way to obtain two slides, you're already better off than you would be with a commercial unit. Figure 1 represents the side view of the grinder on its base. The height of the wood block will vary, depending upon whether your grinder has 8-in., 7-in. or 6-in. diameter wheels. Size the pieces so that the pivot dimple in the block is 4 in. below the midpoint of the face of your wheel. When I'm sharpening/ grinding a bowl gouge the distance from the face of the wheel will be about 7-in. Vary this to set your "nose angle" on your bowl gouge. I set mine to get 65° but you may use a slightly different angle. This system will also do a spindle gouge very nicely, but the slide will be moved in towards the wheel until the nose angle is closer to 45°. Again, you may prefer something slightly different. I built this base from 3/4 in. thick plywood, carpenter's glue, and dry-wall screws. Note that you have to match the center line distance between your grinder wheels fairly closely. In addition, after laying it out carefully put in your T -nuts before assembling as it would be impossible

Author uses his sharpening system to grind a large roughing out gouge. The sup- port arm can be adjusted to accommodate all sizes of gouges, so that each can be ground to the correct angle every time. The rest at right can be used for scrapers and skews, or can be replaced with a second gouge support.

The shop-built system is very versatile. For freehand or skew sharpening, the author uses a variety of tool supports fit to the basic setup.

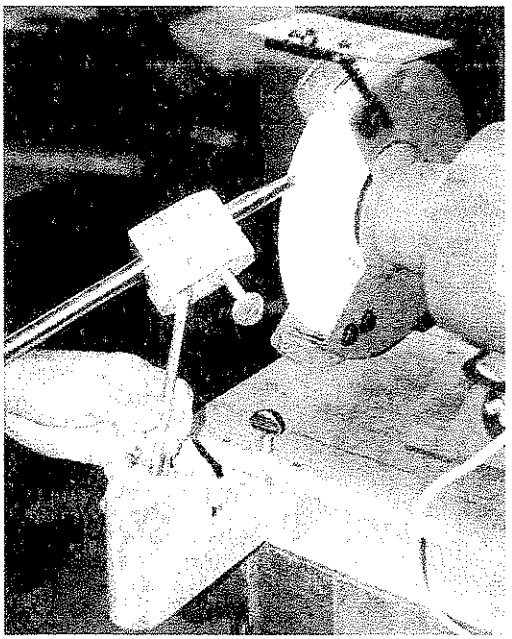

after it is together. Better also if you recess the T -nuts flush to avoid catching your slide. Any 2x2-in. stock would make the slides, but I used some left over maple as it will be

more durable and dent less from the thumbscrew end. The slides should obviously move easily in their tunnels.
If you put the grinder at the front edge of your base you will have trouble using the thumbscrews. Keep its base 3-in. back from the front edge of your base. Figure 1 and 2 are other- wise mostly self -explanatory.

The Gouge Holding Jig

The various components of Figure 3 on the next page detail my Gouge Holding jig. Note that the figure has a dimensional scale along its top edge, as the dimensions of this need to be fairly accurate. If the scale lines are not 1-in. (dots = 1/4 in.) apart on the illustration, enlarge (or reduce) on a photocopier for a more accurate copy.
This jig requires one 5/16-in. T-nut and matching
1 1/2in. thumbscrew and 6-in. of 5/16-in. metal rod (which could even be from an 8-in. carriage bolt). Use any fine-grained hard wood for this. Trim to 1 1/2-in.-thick- ness. Note that the grain is run vertically on the sides, as it must resist tension in this direction. While you're at it, cut yourself enough pieces to make 3-to-4 jigs at once. You probably will spoil one or more and may want to have an extra one besides.
Cut the strips for the bottom first, and drill for the pivot rod and T-nut. Put in the T-nut before assembly, as it will be buried and impossible to reach after everything is assembled. Again, it should be flush with the wood. The angle for the pivot rod needs to be fairly close to 130° from the horizontal (or 50° measured the other way) If the angle is off significantly, ream out its hole a bit and epoxy or thick super-glue it in at the correct angle. The lower end of the pivot should be rounded and smooth and make sure the upper end does not protrude into the center opening.

The side pieces (Figure 3 B) need to be carefully shouldered until the center opening is just a bit (1/ 32-in.) wider than the widest gouge you will need to sharpen, (i.e. 21/32-in. for a 5/8-in. gouge). And then you can cut the top strip to match this spacing.
A metal strip of any kind cemented into the top of the opening as shown in Fig. 3B, will prevent your gouge edges from eroding your jig. When the unit has been completely assembled and aligned, and the glue is dry, trim it on a disk sander and taper the end as is shown in Fig. 3C, so that the comers of the jig do not hit the stone.
To make the jig usable with l/2-in. diameter or smaller gouges, make a 30° V-shaped centering strip, as shown in Figs. 3B & 3D. It should fit loosely and move up easily to clamp in a smaller gouge. A small bent finishing nail at each end will prevent it from falling out. Although this jig is primarily de signed for bowl gouges,. it does work quite well on spindle gouges. You may not wish to bring the grind back quite so far for spindle gouges. Take one of the several jigs you made and increase the angle between the gouge and rod to .145° (or 35° measured the other way) to produce a shorter side bevel. My entire grinding system was finished with water-based polyurethane. It's a simple-to-apply, durable, and easy-to-clean finish.

Scraper Or Freehand Rest

For sharpening a scraper, cut-off tool or performing some other semi- freehand sharpening job, some sort of steady rest is very helpful. The one in the drawing on the

first page of this article offers many possibilities. Go back and add a vertica13/4-in. hole in each of your slide, 1 1/4-in. ahead of the v. (Shown in Fig. 1)
Cut a support block 11/2-in. X 21/4- in. X 8-in. long and put a V on one edge to match the V on your slides. With it in place snugly in the V, mark the end through the hole in the slide for drilling (a dowel center is handy for this). Drill a vertical 3/ 4-in. hole in the end and glue in a 4-to-5-in. length of 3/4-in. dowel or turning.
Now trim and sand the piece until it is a snug knock in fit. Leave the dowel long enough to make it easy to knock out. Pick the angle you like .to grind scrapers at (mine are about 15°) and mark the block to be trimmed for your platform so that the front edge of your rest platform is at the mid-point of your wheel. The essentials of this rest are shown in the drawing on the first page. A similar one with just a round rod for a platform is also handy.

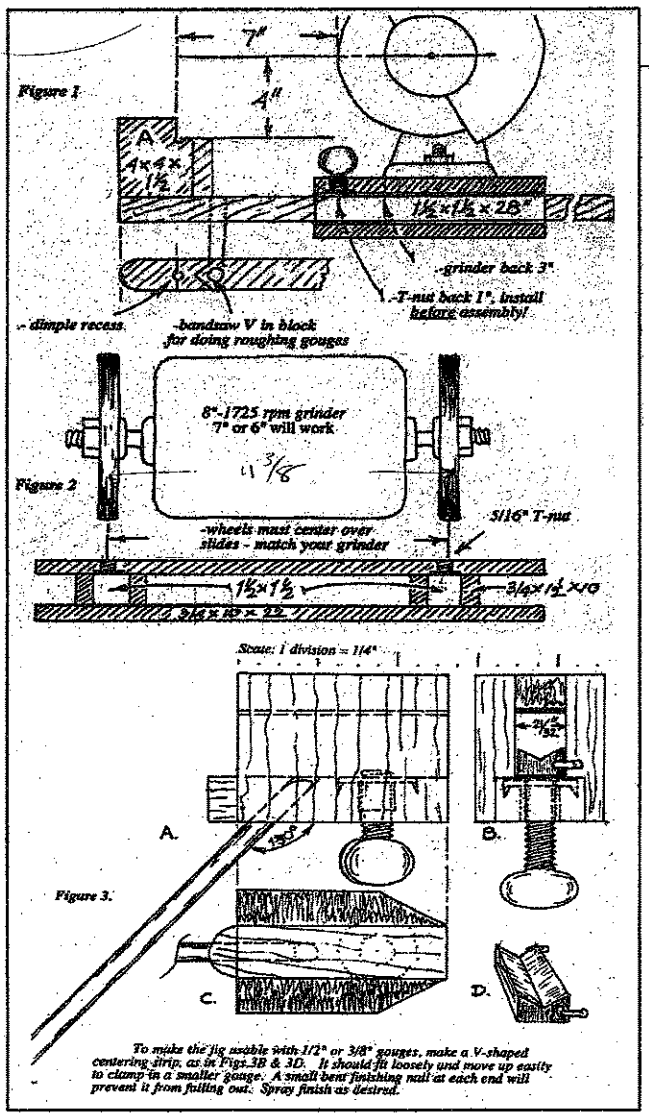

King Helple's Shop-Built Jig

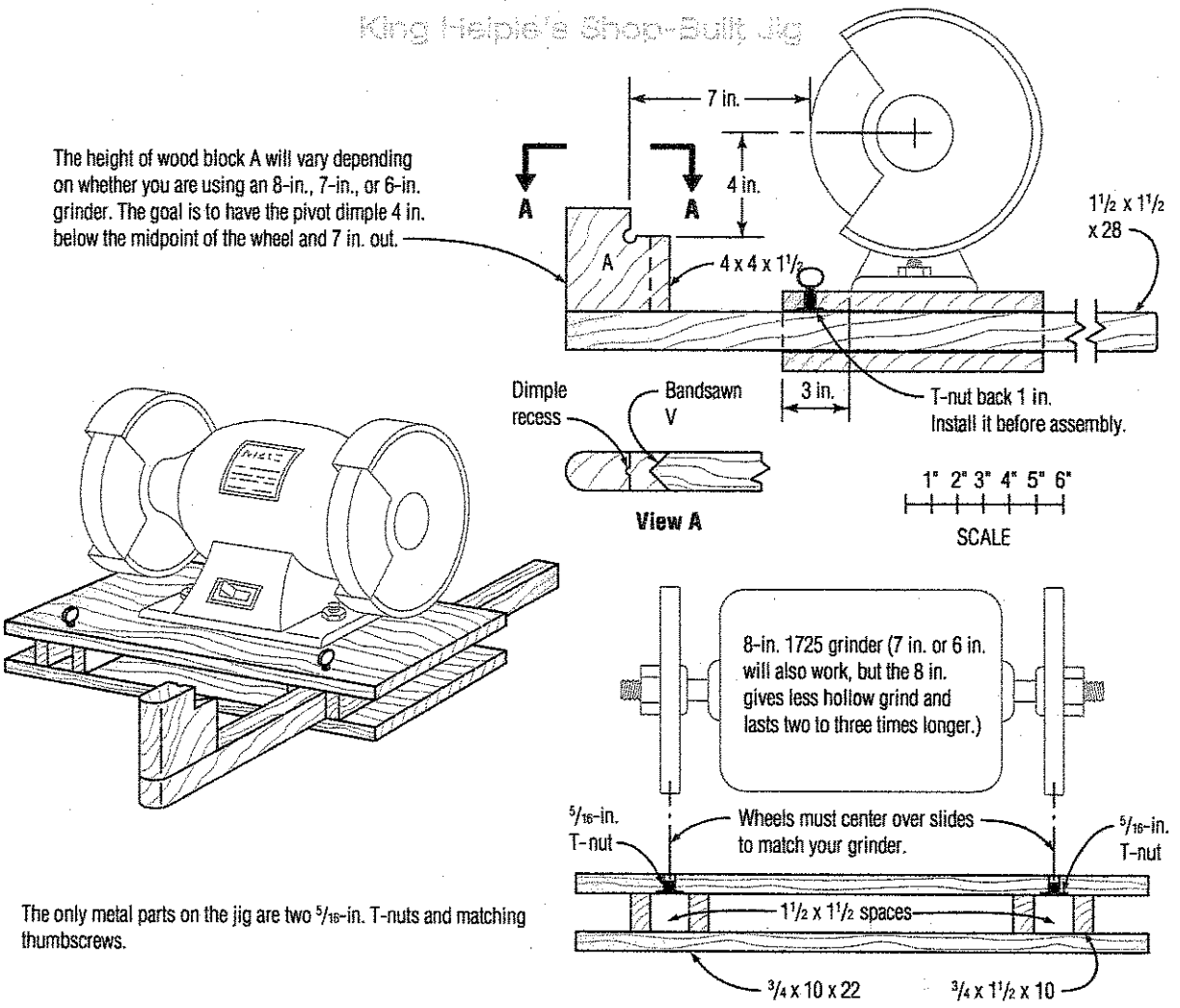

The height of wood block A will vary depending on whether you are using an 8-in., 7-in., or 6-in. grinder. The goal is to have the pivot dimple 4 in. below the midpoint of the wheel and 7 in. out.

The only metal parts on the jig are two 5/16-in. T-nuts and matching thumbscrews.

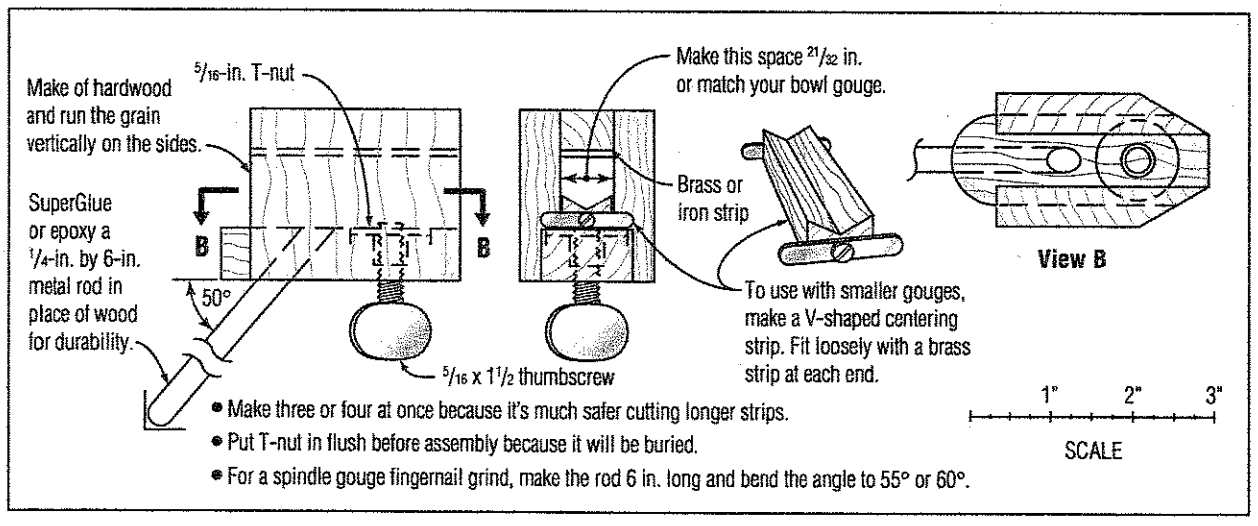

- Make three or four at once because it's much safer cutting longer strips.
- Put T-nut in flush before assembly because it will be buried.
- For a spindle gouge fingernail grind, make the rod 6 in. long and bend the angle to 55° or 60°.

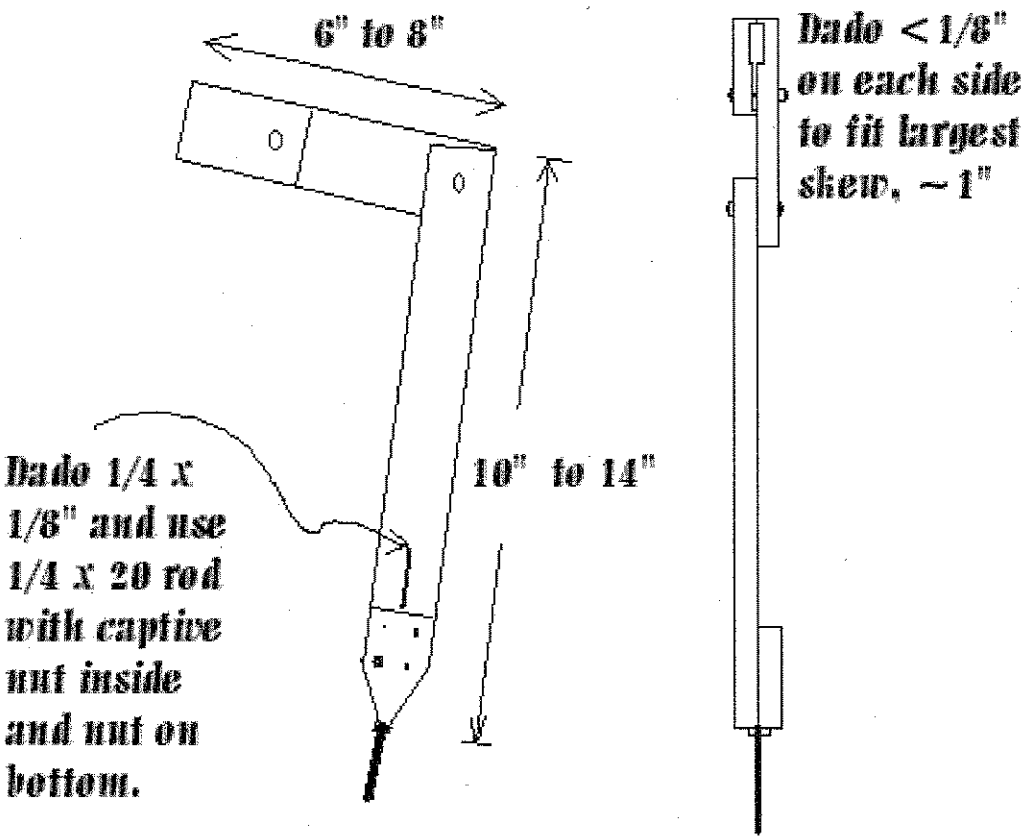
6" to 8"
Dado < 1/8" on each side to fit largest skew, ~ 1"
Dado 1/4 x 1/8" and use 1/4 x 20 rod with captive nut inside and nut on bottom.
10" to 14"