King Heiple's Shop-Built Jig

The height of wood block A will vary depending on whether you are using an 8-in., 7-in., or 6-in. grinder. The goal is to have the pivot dimple 4 in. below the midpoint of the wheel and 7 in. out.

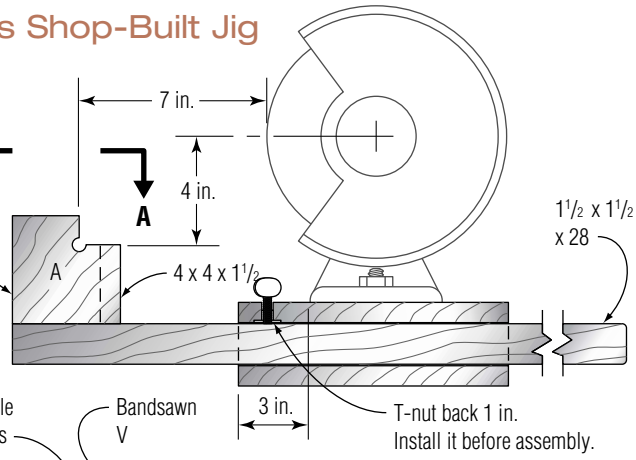

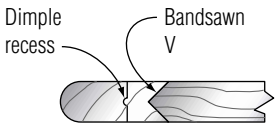

View A

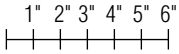

SCALE

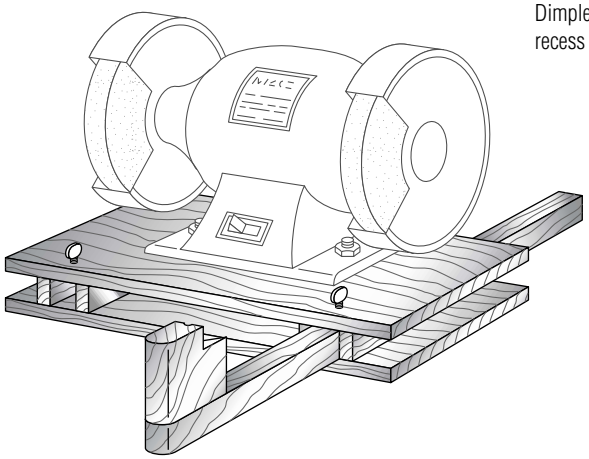

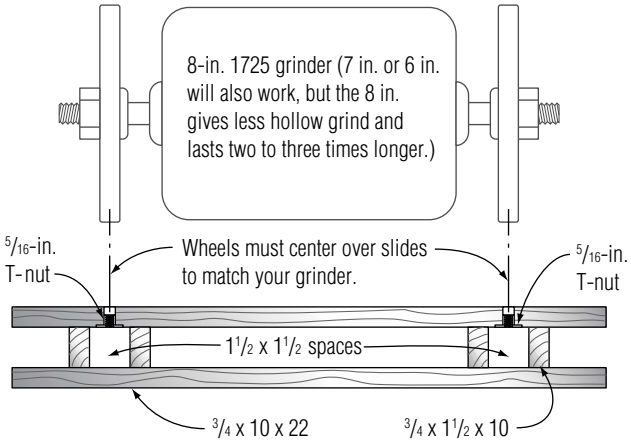

The only metal parts on the jig are two 5/16-in. T-nuts and matching thumbscrews.

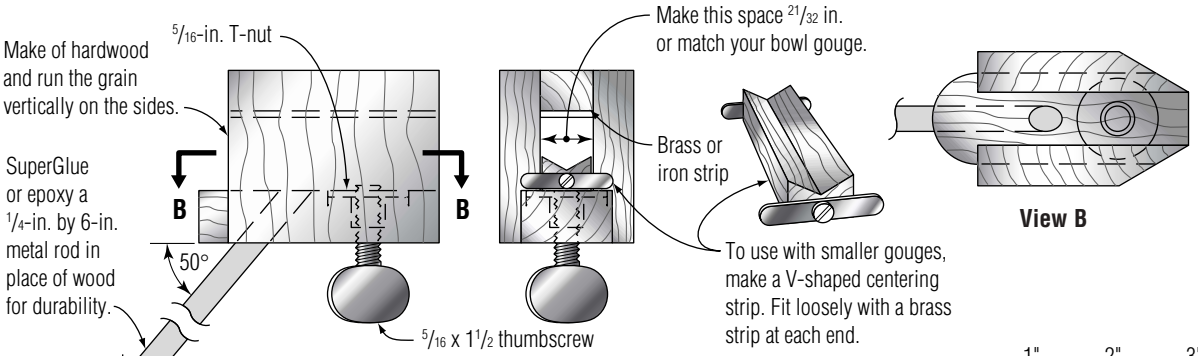

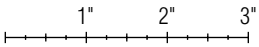

SCALE

- Make three or four at once because it's much safer cutting longer strips.
- Put T-nut in flush before assembly because it will be buried.
- For a spindle gouge fingernail grind, make the rod 6 in. long and bend the angle to 55° or 60°.